GEFRAN

SMART HART NaK FILLED MELT PRESSURE TRANSMITTERS
HKE SERIES - CURRENT OUTPUT
AND PERFORMANCE LEVEL 'c'

4...20mA Output

The HKE series of Gefran are pressure transmitters with HART communication protocol for using in high temperature environment.
The main characteristic of this series is the capability to read temperature of the media up to 538°C.
The constructive principle is based on the hydraulic trasmission of the pressure.
The fluid-filled system assures the temperature stability. The physical measure is transformed in a electrical measure by means of strain-gauge technology.

MAIN FEATURES

- Pressure ranges from: 0-35 to 0-1000 bar / 0-500 to 0-15000 psi
- Accuracy: < ±0.25% FSO (H); < ±0.5% FSO (M)
- Hydraulic transmission system for pressure signal guarantees stability at working temperature (NaK).
- Liquid conforming to RoHS Directive. NaK is defined as a safe substance (GRAS)
- Quantity of NaK contained per model: HKE0 series (30mm³) [0.00183 in³], HKE1, HKE2, HKE3 (40mm³) [0.00244 in³]
- 1/2-20UNF, M18x1.5 standard threads; other types available on request
- Autozero function on board / external option
- Inconel 718 diaphragm with GTP coating for temperatures up to 538°C (1000°F)
- 15-5 PH diaphragm with GTP coating for temperatures up to 400°C (750°F)
- Hastelloy C276 diaphragm for temperatures up to 300°C (570°F)
- 17-7 PH corrugated diaphragm with GTP coating for ranges below 100bar-1500psi (up to 400°C/750°F)
- Stem material: 17-4 PH

GTP (advanced protection)
Coating with high resistance against corrosion, abrasion and high temperature

AUTOZERO FUNCTION

All signal variations in absence of pressure can be eliminated by using the Autozero function.
This function is activated by closing a magnetic contact located on the transmitter housing.
The procedure is permitted only with pressure at zero.
This function can be activited via HART as well.

TECHNICAL SPECIFICATIONS

Accuracy (1)	**H** <±0.25%FSO (100...1000 bar) **M** <±0.5%FSO (17...1000 bar)
Resolution	16 bit
Measurement range	0..17 to 0..1000bar 0..250 to 0..15000psi
Rangeability	3:1
Maximum overpressure (without degrading performances)	2 x FS 1.5 x FS above 700bar/10000psi
Measurement principle	Extensimetric
Power supply	13...30Vdc
Maximum current absorption	23mA (40mA with relay optional)
Output signal Full Scale (FSO)	20mA
Zero balance (tollerance ± 0.25% FSO)	4mA
Calibration signal	80% FSO
Power supply polarity reverse protection	YES
Compensated temperature range housing	0...+85°C
Operating temperature range housing	-30...+85°C
Storage temperature range housing	-40...+125°C
Thermal drift in compensated range: Zero / Calibration / Sensibility	< 0.02% FSO/°C
Diaphragm maximum temperature	538°C / 1000°F
Zero drift due to change in process temperature (zero)	< 3.5 bar/100°C / < 28 psi/100°F
Thermocouple (model HKE2)	STD: type "J" (isolated junction)
Protection degree (with 6-pole female connector)	IP65

FSO = Full scale output :
(1) BFSL method (Best Fit Straight Line): includes combined effects of Non-Linearity, Hysteresis and Repeatability

MECHANICAL DIMENSIONS

HKE0

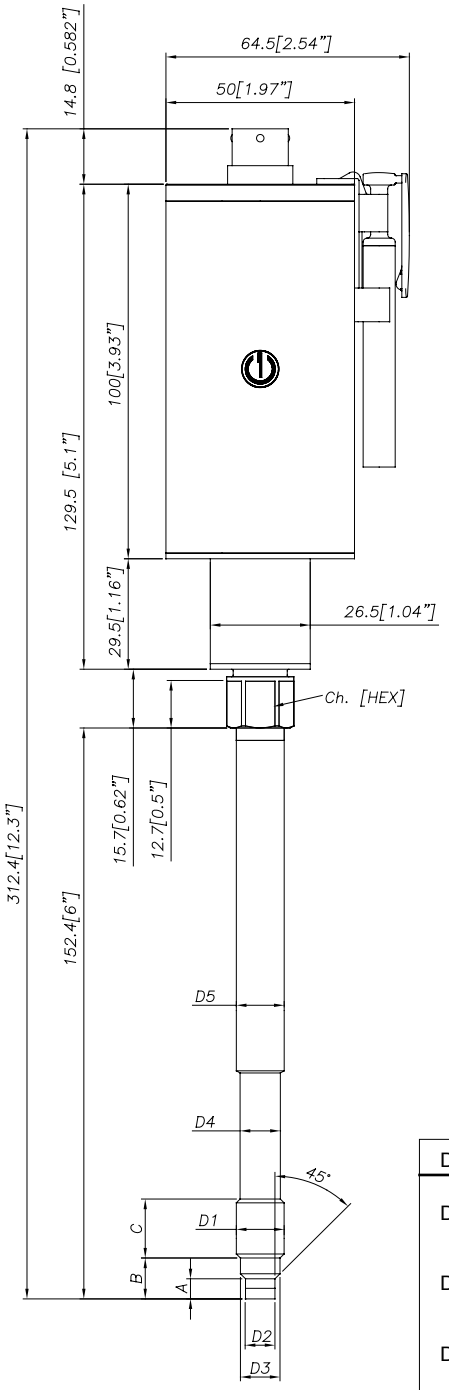

HKE1

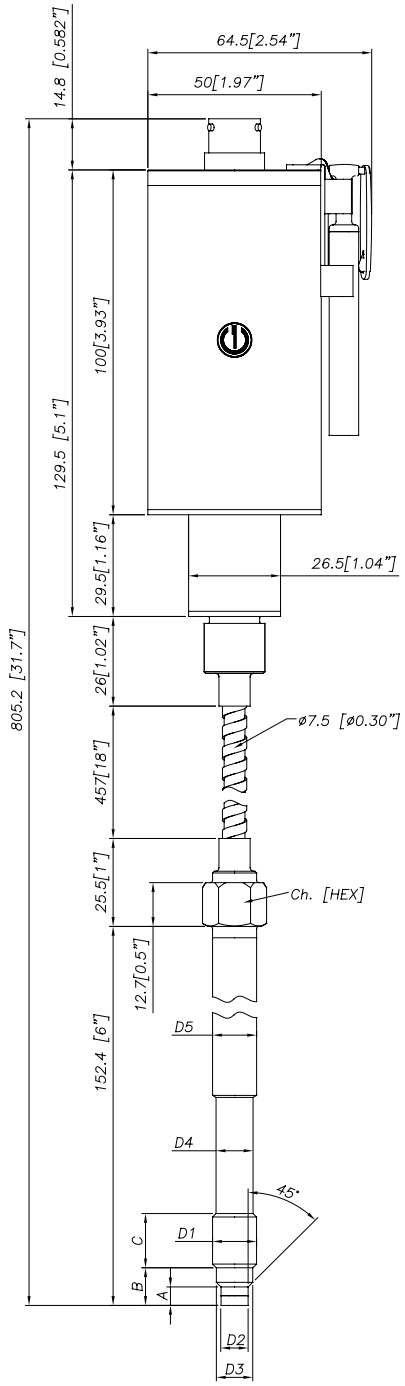

D1	1/2 - 20UNF
D2	ø7.8 -0.05 [ø0.31" -0.002]
D3	ø10.5 -0.025 [ø0.41" -0.001]
D4	ø10.67 [ø0.42"]
D5	ø12.7 [ø0.5"]
A	5.56 -0.26 [0.22" -0.01]
B	11.2 [0.44"]
C	15.74 [0.62"]
Ch [Hex]	16 [5/8"]

D1	M18x1.5
D2	ø10 -0.05 [ø0.394" -0.002]
D3	ø16 -0.08 [ø0.63" -0.003]
D4	ø16 -0.4 [ø0.63" -0.016]
D5	ø18 [ø0.71"]
A	6 -0.26 [0.24" -0.01]
B	14.8 -0.4 [0.58" -0.016]
C	19 [0.75"]
Ch [Hex]	19 [3/4"]

NOTE: dimensions refer to rigid stem length option “4” (153 mm– 6”)

WARNING: For installation use a maximum tightening torque of 56 Nm (500 in-lb)

MECHANICAL DIMENSIONS

HKE2

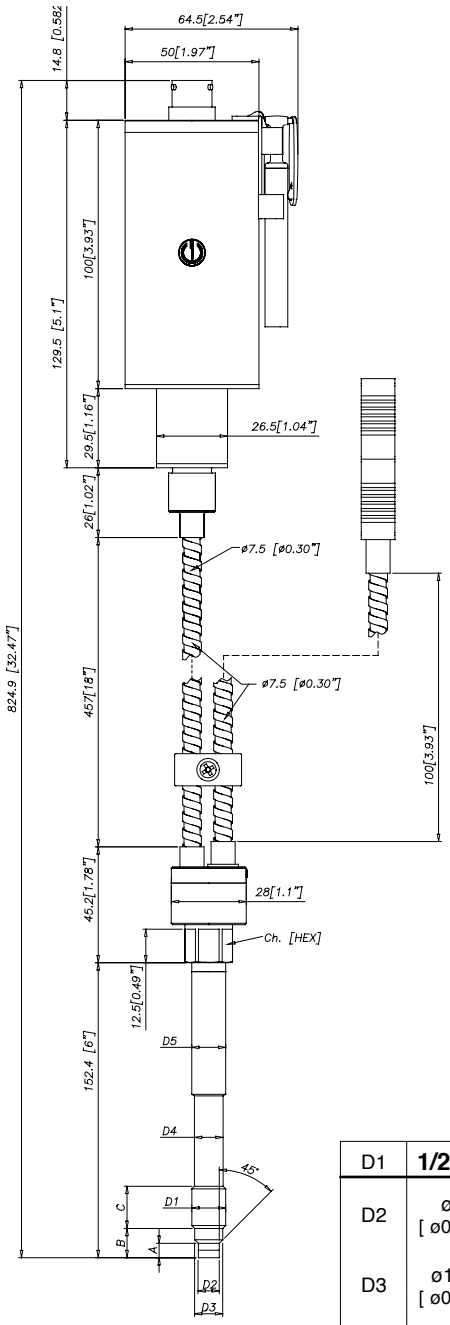

HKE3

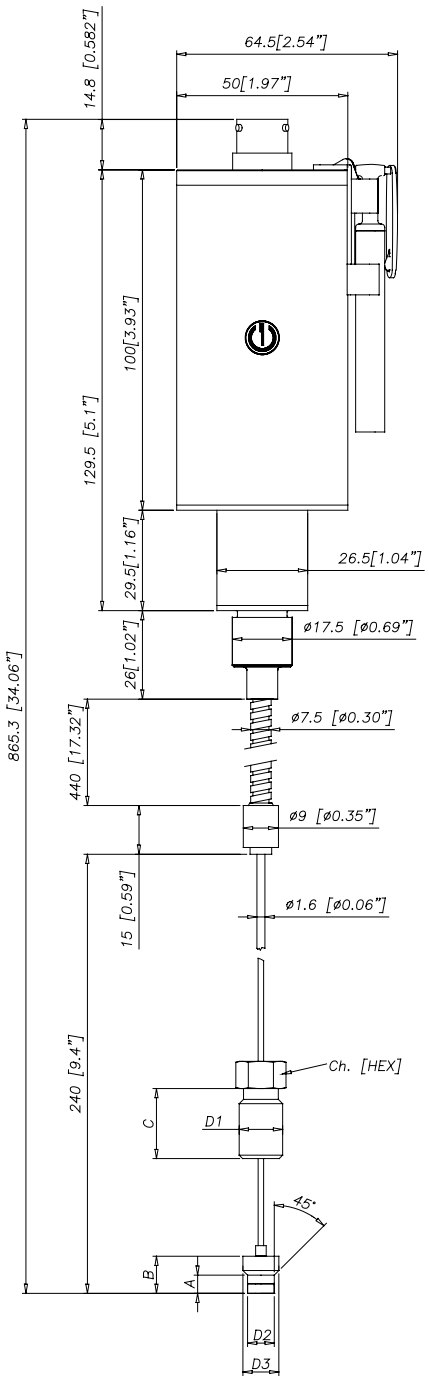

D1	1/2 - 20UNF
D2	ø7.8 -0.05 [ø0.31" -0.002]
D3	ø10.5 -0.025 [ø0.41" -0.001]
D4	ø10.67 [ø0.42"]
D5	ø12.7 [ø0.5"]
A	5.56 -0.26 [0.22" -0.01]
B	11.2 [0.44"]
C	15.74 [0.62"]
Ch [Hex]	16 [5/8"]

D1	M18x1.5
D2	ø10 -0.05 [ø0.394" -0.002]
D3	ø16 -0.08 [ø0.63" -0.003]
D4	ø16 -0.4 [ø0.63" -0.016]
D5	ø18 [ø0.71"]
A	6 -0.26 [0.24" -0.01]
B	14.8 -0.4 [0.58" -0.016]
C	19 [0.75"]
Ch [Hex]	19 [3/4"]

NOTE: dimensions refer to rigid stem length option “4” (153 mm– 6”)

WARNING: For installation use a maximum tightening torque of 56 Nm (500 in-lb)

SELF DIAGNOSTICS (ONLY FOR PL'C' VERSIONS)

Below the conditions detected by the sensor self-diagnostics:
· Cut cable / device non connected / broken power supply, output ≤ 3.6mA
· Pin detachment output ≤ 3.6mA
· Broken primary element ≥21mA
· Pressure above 200% of the span, output ≥21mA
· Voltage monitor in case of overvoltage/undervoltage/voltage variation in the electronics, output ≤ 3.6mA (*)
· Program sequence error, output ≤ 3.6mA (*)
· Overtemperature on the electronics, output ≤ 3.6mA (*)
· Error on the primary element output or on the first amplification stage, output ≥ 21mA

(*) *In such conditions the Alarm Type can be programmed via HART at ≥ 21 mA.*

OPTIONAL RELAY OUTPUT FOR EXCESS PRESSURE PROTECTION

Safety relay characteristics:

- Activation threshold to be defined in the order code
· Rated carry current: 1A
· Rated voltage: 24Vdc ± 20%
· Switch accuracy: 2 x sensor accuracy
· Hysteresis: 2% FSO

SUPPLY	OUTPUT	RELAY STATUS
OFF	-	OPEN
ON	< X%fs	CLOSED
ON	> X%fs	OPEN
ON	Output ≤ 3.6mA	OPEN
ON	Output ≥ 21mA	OPEN

NAMUR COMPLIANCE (ONLY FOR PL'C' VERSIONS)

The sensors are tested according to Namur NE21 recommendations. The same compatibility is valid for the NE43 Namur recommendation with the following sensor behaviour in case of breakdown:
· Cut cable: breakdown information as the signal is ≤ 3.6mA
· Device not connected: breakdown information as the signal is ≤ 3.6mA
· Broken power-supply: breakdown information as the signal is ≤ 3.6mA or in case of performance problems:
· Broken primary element ≥ 21mA
· Pressure above 200% of the span, output ≥21 mA
· Others ≤ 3.6mA(*)

(*) *In such a condition the Alarm Type can be programmed via HART at ≥ 21 mA.*

Note: in all the remaining situations, the output signal is always included between 3.8 and 20.5mA.

Recommendation: the error level set by the customer (e.g. maximum pressure value) has to be inside the nominal range.

LOAD DIAGRAM

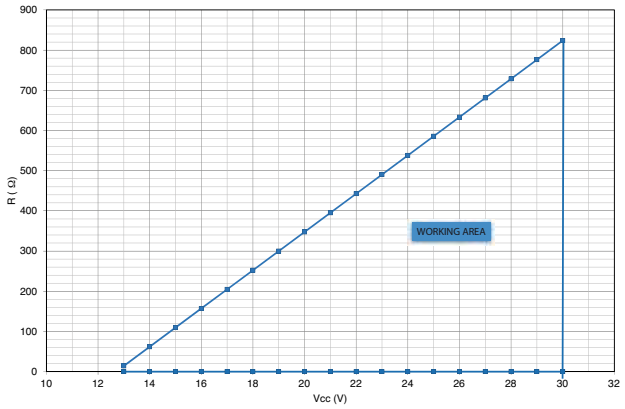

The diagram shows the optimum ratio between load and power supply for transmitters with 4…20mA output.
For correct function, use a combination of load resistance and voltage that falls within the two lines in the graph above.

AUTOZERO FUNCTION

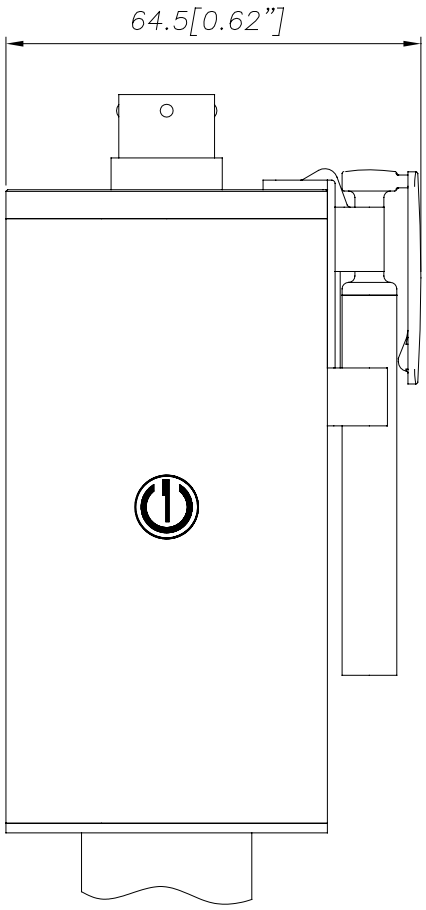

The Autozero function is activated through a magnetic contact (external magnet supplied with the sensor).
The Autozero function can be activated through HART command as well.
See the manual for a complete Autozero function explanation.

ELECTRICAL CONNECTIONS

CURRENT OUTPUT

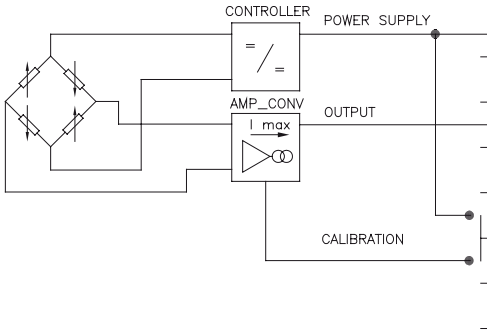

MAGNETIC AUTOZERO

	6–pin	8–pin	Cable
+	A	B	Red
n.c.	C	A	n.c.
−	B	D	Yellow or Black
n.c.	D	C	n.c.
	E	E	Blue
	F	F	Orange
n.c.		G–H	

EXTERNAL AUTOZERO

		6–pin	8–pin	Cable
POWER SUPPLY	+	A	B	Red
	n.c.	C	A	n.c.
OUTPUT	−	B	D	Yellow or Black
	n.c.	D	C	n.c.
		E	E	Blue
AUTOZERO or CAL		F	F	Orange
	n.c.		G–H	

The cable shield is tied to both sides, i.e. to the sensor connector and to the controller

RELAY OUTPUT

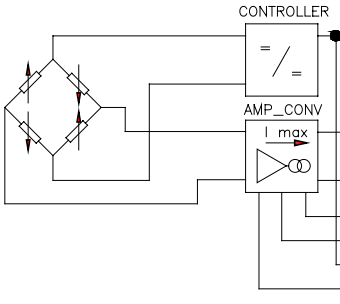

MAGNETIC AUTOZERO

	6–pin	8–pin	Cable
+	A	B	White
n.c.	C	A	n.c.
−	B	D	Green
−	D	F	Gray
	E–F	G–C	Blue/ Brown
		E–H	Yellow/ Pink

EXTERNAL AUTOZERO

		8–pin	Cable
POWER SUPPLY	+	B	White
	n.c.	A	n.c.
OUTPUT	−	D	Green
POWER SUPPLY	−	F	Gray
RELAY CONTACT		G–C	Blue/ Brown
AUTOZERO or CAL		E–H	Yellow/ Pink

The cable shield is tied to both sides, i.e. to the sensor connector and to the controller

6 pin Connector VPT07RA10-6PT2 (PT02A-10-6P)

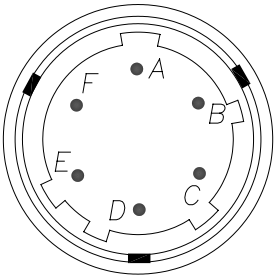

8 pin Connector (PC02E-12-8P) Bendix

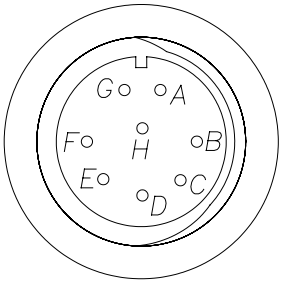

CABLE OUTPUT (1/2 14-NPT) L = 1 m

Current output

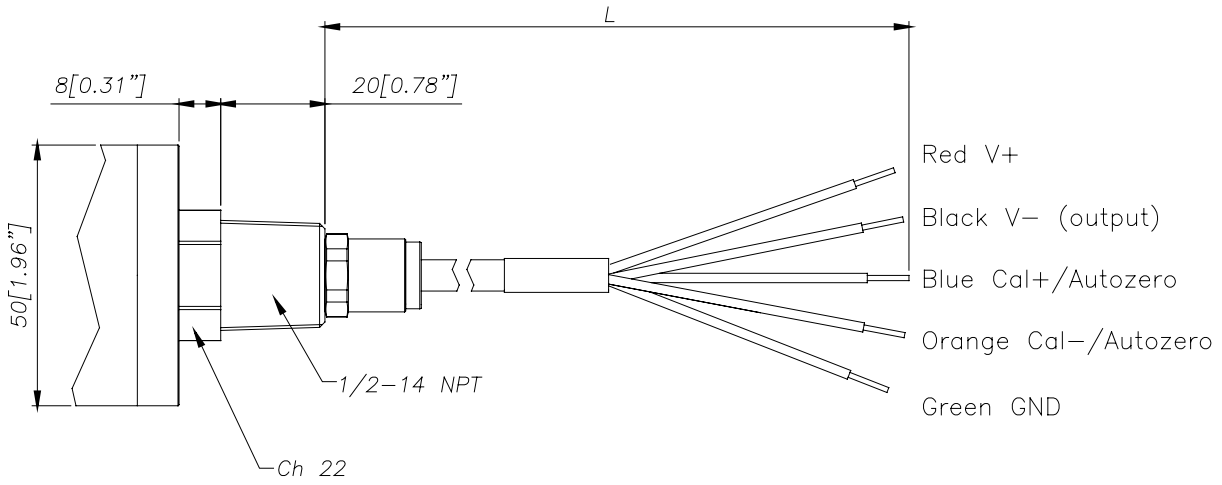

Relay output
Magnetic Autozero/External Autozero

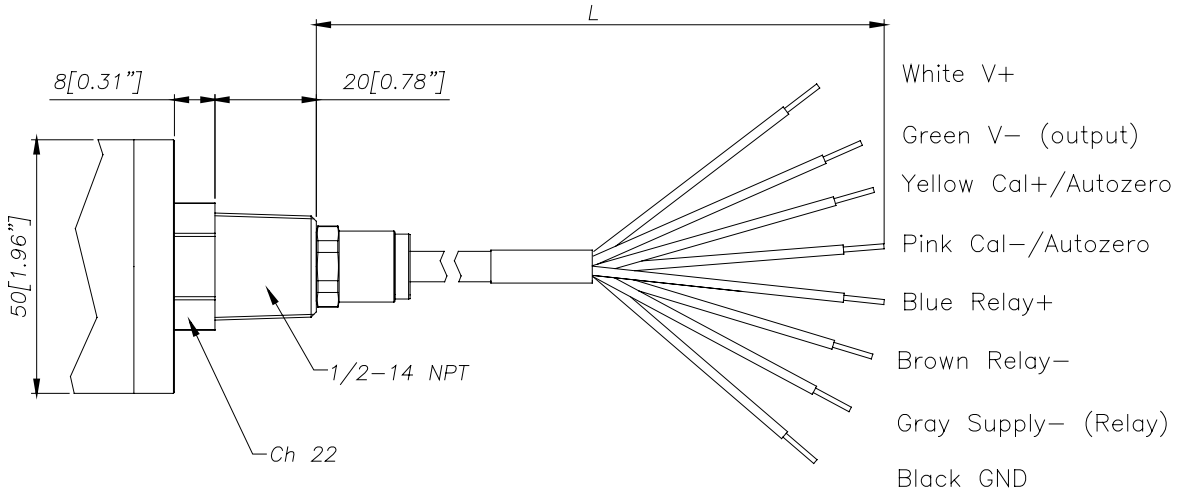

ACCESSORIES

Connectors

6-pin female connector (IP65 protection degree)	**CON300**
8-pin female connector	**CON307**

Extension cables

6-pin connector with 8m (25ft) cable	**C08WLS**
6-pin connector with 15m (50ft) cable	**C15WLS**
6-pin connector with 25m (75ft) cable	**C25WLS**
6-pin connector with 30m (100ft) cable	**C30WLS**

Accessories

Mounting bracket	**SF18**
Dummy plug for 1/2-20UNF	**SC12**
Dummy plug for M18x1.5	**SC18**
Drill kit for 1/2-20UNF	**KF12**
Drill kit for M18x1.5	**KF18**
Cleaning kit for 1/2-20UNF	**CT12**
Cleaning kit for M18x1.5	**CT18**
Fixing pen clip	**PKIT1032**
Autozero pen	**PKIT378**

Thermocouple for HKE2 model

Type "J" (153mm - 6" rigid rod)	**TTER 601**

Cable color code

Conn.	Wire
A-2	Red
B-4	Black
C-1	White
D-6	Green
E-7	Blue
F-3	Orange
5	Grey
8	Pink

ORDER CODE

HK -□-□-□-□-□□□□-□-□-□-□-□-□ 0000 X 000 X 0

Output relay version (activation threshold):
X = no relay B = 80% fs
A = 70% fs C = 90% fs

000= Special executions

OUTPUT SIGNAL	
4...20mA	E

VERSION	
Rigid rod	0
Rigid + flexible rod	1
With thermocouple	2
Exposed capillary	3

CONNECTOR	
6 pin	6
8 pin	8
NPT Cable	N

ACCURACY CLASS	
0.25% FSO (ranges ≥ 100 bar/1500 psi)	H
0.5% FSO	M

MEASUREMENT RANGE			
bar (*)		psi (*)	
17	B17U	250	P25D
35	B35U	500	P05C
50	B05D	750	P75D
70	B07D	1000	P01M
100	B01C	1500	P15C
200	B02C	3000	P03M
350	B35D	5000	P05M
500	B05C	7500	P75C
700	B07C	10000	P10M
1000	B01M	15000	P15M

(*) Hastelloy diaphragm not available for pressure range ≤ 70 bar (1000 psi)

THREADING	
Standard	
1/2 - 20 UNF	1
M18 x 1.5 (*)	4

E	External Autozero (*)
0	Magnetic Autozero
(*) as an alternative to the CAL function	

P	Performance Level='c'
0	Standard 4...20mA

CONTACT DIAPHRAGM	
I	INCONEL 718 (538°C*)
S	15-5 PH (400°C*)
H	HASTELLOY C276 (300°C*)
(*) max temperature	

FLEXIBLE ROD LENGTH (mm/inches)		
Standard (HKE0)		
0	none	
Standard (HKE1, HKE2)		
D	457mm	18"
E	610mm	24"
F	760mm	30"
Standard (HKE3)		
L	711mm	28"
Available on request		
A	76mm	3"
B	152mm	6"
C	300mm	12"
G	914mm	36"
H	1067mm	42"
I	1220mm	48"
J	1372mm	54"
K	1520mm	60"

RIGID ROD LENGTH (mm/inches)		
Standard (HKE0, HKE1,HKE2)		
4	153mm	6"
5	318mm	12.5"
Standard (HKE3)		
0	none	
Available on request		
1	38mm	1,5"
2	50mm	2"
3	76mm	3"
6	350mm	14"
7	400mm	16"
8	456mm	18"

Example
HKE1-6-M-B07C-1-4-D-I-P-0

Melt pressure transducer 4...20mA output with HART protocol, 6-pin connector, 0.5% accuracy, 700 bar pressure range, 1/2-20 UNF threading, 153 mm (6") rigid rod, 457 mm (18") flexible rod, Inconel 718 diaphragm, Performance Level='c'.

Sensors are manufactured in compliance with:
- EMC 2004/108/CE compatibility directive
- RoHS 2002/95/CE directive
- 2006/42/CE machinery directive

Electrical installation requirements and conformity certificate are available on our web site: www.gefran.com

GEFRAN spa reserves the right to make any kind of design or functional modification at any moment without prior notice.

GEFRAN spa
via Sebina, 74
25050 PROVAGLIO D'ISEO (BS) - ITALIA
tel. 0309888.1 - fax. 0309839063
Internet: http://www.gefran.com

GEFRAN